Simplified Method for the Calculation of Soakaway Depths

PD 30 rev C 7/12/00

1. Introduction

This document details the procedure for determining the storage capacity required in soakaways in accordance with the requirements of BS 8301: 1985. The simplified method given makes no allowance for the outflow from the soakaway as this requires knowledge of the ground conditions in which it is to be constructed. A design procedure making allowance for the outflow can be found in BRE Digest 365: 1991.

2. Calculation of Storage Capacity

The effective depth of a soakaway chamber, h, is defined as the depth between the invert level of the lowest pipe entering the chamber and the base of the chamber.

To calculate the required storage capacity BS 8301: 1985 recommends that a rainfall depth of 12 mm be taken over the entire drainage area. The required effective depth of the soakaway can either be read directly from the graph shown below or calculated from the following equation.

$$h = \frac{0.048A}{\pi D^2}$$

where A = Area to be drained (m^2)
D = Soakaway diameter (m)
h = effective depth (m)

Effective Depth for Soakaway Units of Different Sizes

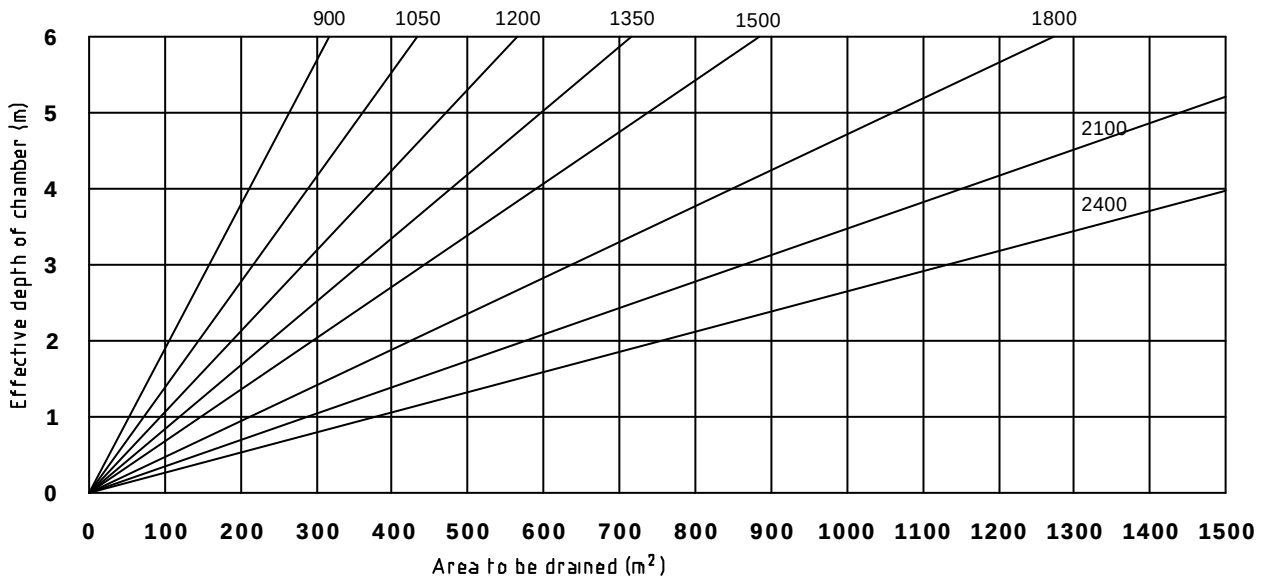

3. Soakaway Construction

BRE Digest 365: 1991 recommends that perforated precast concrete soakaways be constructed in a square excavation, the side lengths of which are approximately twice the soakaway diameter.

The sides of the excavation should be lined with a geotextile membrane suitable for preventing the migration of fines into the soakaway. The excavation should then be filled with granular material. The top surface of the granular material should also be covered with the geotextile to prevent the ingress of material during backfilling. Geotextile should not be placed around the outside of the soakaway unit.

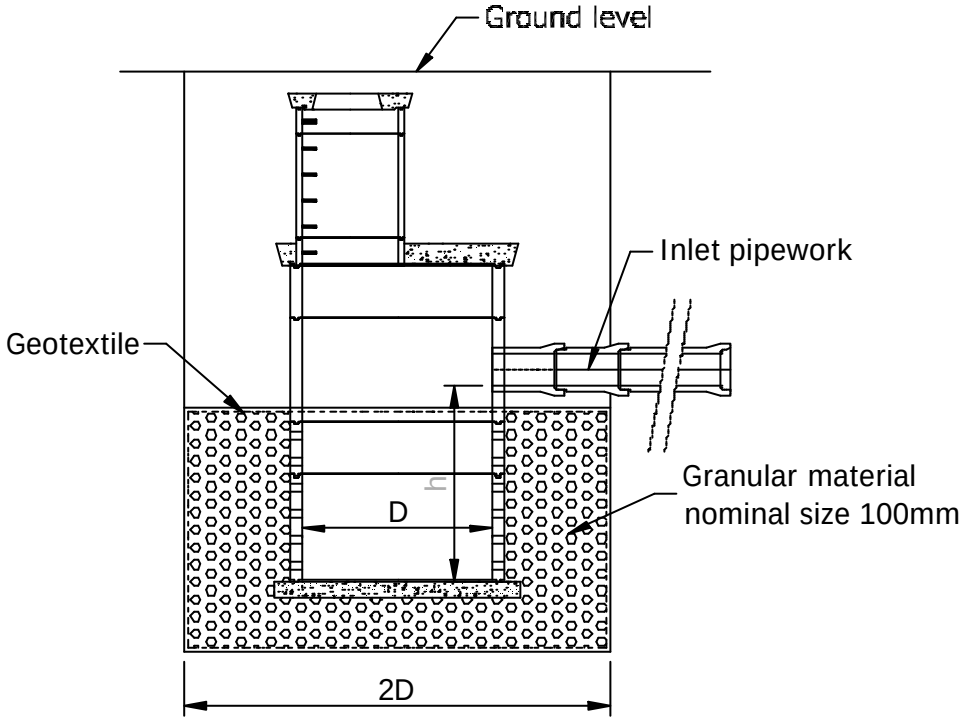

Right to Change: The specifications given in this document are believed to be correct but are not guaranteed. Stanton Bonna reserve the right to alter any specifications given in accordance with its policy of continuous product development. All rights reserved.

STANTON BONNA CONCRETE LTD, LITTLEWELL LANE, STANTON-BY-DALE, ILKESTON, DERBYS. DE7 4QW
TEL: (0115) 944 1448 FAX: (0115) 944 1466 E-MAIL: sales@stanton-bonna.co.uk